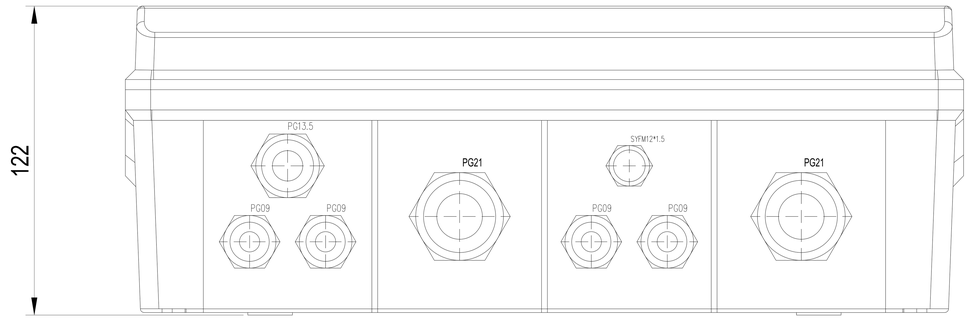

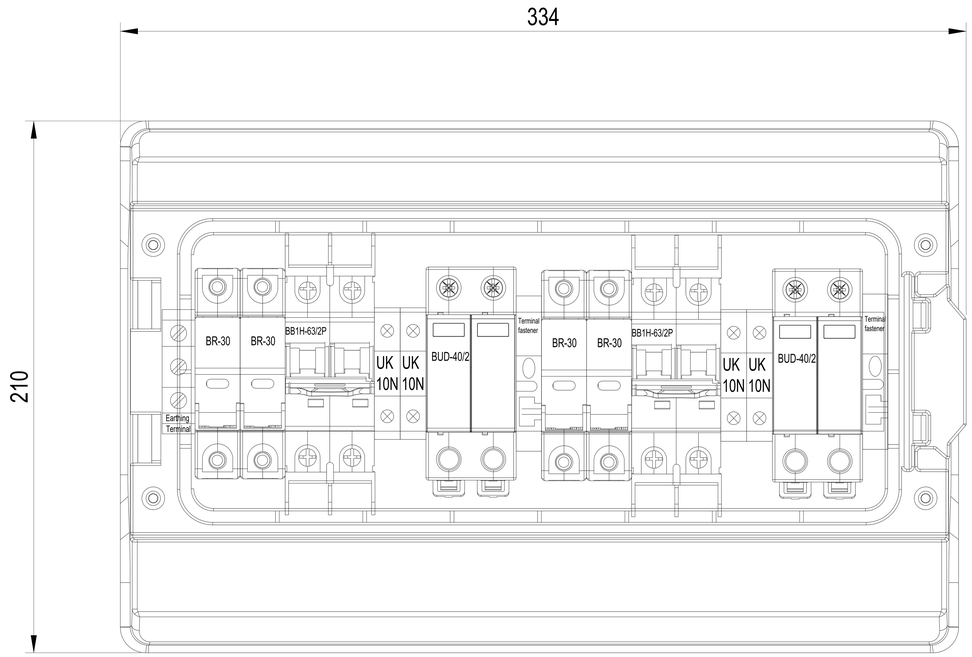

VOLTACON®
ENERGY SYSTEMS

number	label	The name of the	specifications	quantity	note
4		Vent valve	SYFM12*1.5	1	
3		CABLE GLAND	PG21 SEALING RANGE 13-18mm	2	
2		CABLE GLAND	PG13.5 SEALING RANGE 6.7-12mm	1	
1		CABLE GLAND	PG9 SEALING RANGE 4-8mm	4	

The contract no		Tank no		Factory number	
tag	Change the file no	The signature	The date of	BHS-2/2(DC600V BB1H) PV COMBINER BOX	Pattern marker / The proportion
design		standardized		Arrangement diagram	
drawing		Review and approval			
check		approval			
process		The date of			VOLTACON UK LIMITED

VOLTACON®
ENERGY SYSTEMS

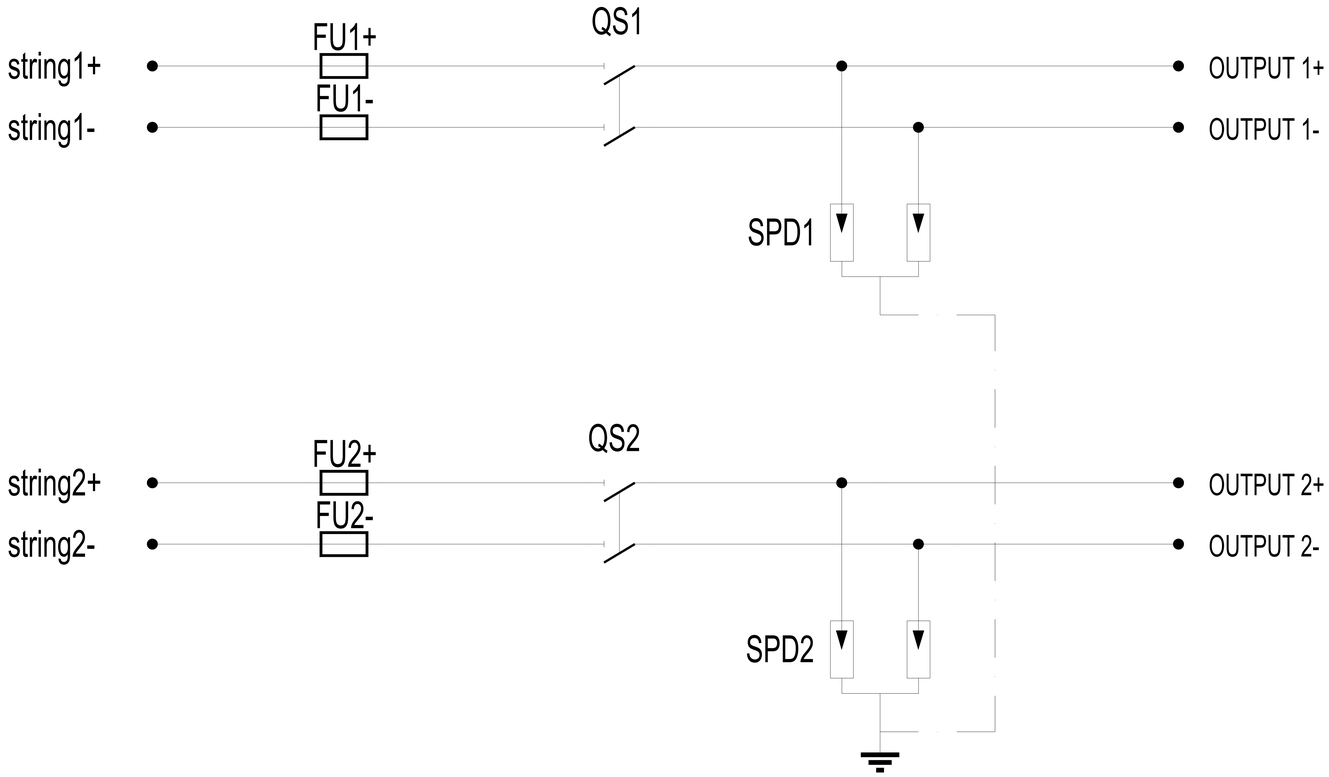

number	label	The name of the	specifications	quantity	note
4	QS1-QS2	DC Switch	BB1H-63/2P In=63A DC600V	2	
3	SPD1,SPD2	DC SPD	BUD-40KA/2P DC600V	2	
2		DC Fuse Link	OSPV20A DC1000V	4	
1	FU	DC Fuse Holder	BR-30/1P Imax=30A DC1000V	4	

The contract no				Tank no		Factory number
tag		Change the file no	The signature	The date of	BHS-2/2(DC600V BB1H) PV COMBINER BOX	Pattern marker / The proportion
design		standardized			Schematic diagram	
drawing		Review and approval				
check		approval				VOLTACON UK LIMITED
process		The date of				